Repair, Parts

BRITE STRIPER 3500

Airless Line Striper

3A4556B
EN

For the application of line striping materials. For professional use only. For outdoor use only. Not for use in explosive atmospheres or hazardous locations.

Model: 25M229
3300 psi (22.8 MPa, 228 bar) Maximum Operating Pressure

Important Safety Instructions

Read all warnings and instructions in this manual, related manuals, and on the equipment. Be familiar with the controls and the proper usage of the equipment. Save these instructions.

Related Manuals:	
3A4555	Operation
3A4408	Gun
3A4347	Pump

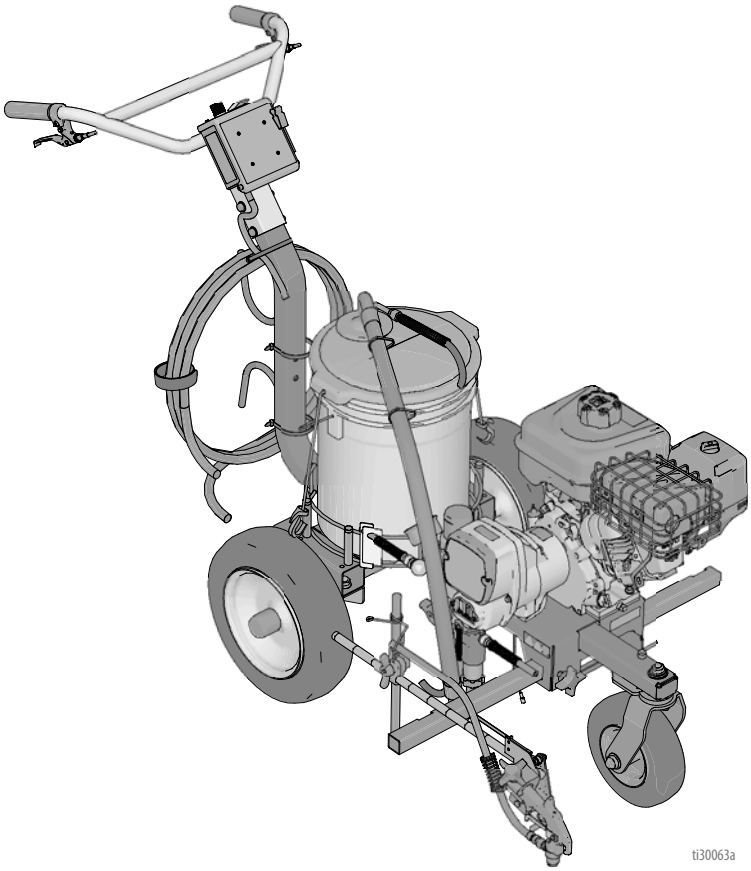

Contents

Warnings 3
Grounding Procedure (For Flammable Materials Only) 6
Pressure Relief Procedure 6
Maintenance 7
Front Wheel Alignment: 7
Troubleshooting 8
Displacement Pump 10
Removal 10
Repair 10
Installation 11
Drive Housing and Connecting Rod 12
Removal 12
Installation 12
Pinion Assembly/Clutch Armature/Clamp 13
Pinion Assembly/Clutch Armature Removal . . . 13
Installation 14
Clamp Removal 15
Clamp Installation 15
Clutch Housing 16
Removal 16
Installation 16
Engine 17
Removal 17
Installation 17
Pressure Control Transducer 18
Removal 18
Installation 18
Pressure Control (On/Off Switch) 19
Removal 19
Installation 19
Pressure Adjust Potentiometer 20
Removal 20
Installation 20
Control Board 20
Removal 20
Installation 20
Parts Drawing 21
25M229 21
Parts List - 25M229 22
Parts Drawing 23
Parts List - 25M229 24
Parts Drawing and List - Pinion Housing 25
Gun Arm Parts 26
Pressure Control/Filter Assembly 27
Parts List - Pressure Control/Filter Assembly . . 28
Pressure Control Wiring Diagram 29
PIONEER LIMITED WARRANTY 30

Warnings

The following warnings are for the setup, use, grounding, maintenance, and repair of this equipment. The exclamation point symbol alerts you to a general warning and the hazard symbols refer to procedure-specific risks. When these symbols appear in the body of this manual or on warning labels, refer back to these Warnings. Product-specific hazard symbols and warnings not covered in this section may appear throughout the body of this manual where applicable.

⚠ WARNING

SKIN INJECTION HAZARD

High-pressure spray is able to inject toxins into the body and cause serious bodily injury. In the event that injection occurs, **get immediate surgical treatment.**

- Do not aim the gun at, or spray any person or animal.
- Keep hands and other body parts away from the discharge. For example, do not try to stop leaks with any part of the body.
- Always use the nozzle tip guard. Do not spray without nozzle tip guard in place.
- Use Graco nozzle tips.
- Use caution when cleaning and changing nozzle tips. In the case where the nozzle tip clogs while spraying, follow the **Pressure Relief Procedure** for turning off the unit and relieving the pressure before removing the nozzle tip to clean.
- Equipment maintains pressure after power is shut off. Do not leave the equipment energized or under pressure while unattended. Follow the **Pressure Relief Procedure** when the equipment is unattended or not in use, and before servicing, cleaning, or removing parts.
- Check hoses and parts for signs of damage. Replace any damaged hoses or parts.
- This system is capable of producing 3300 psi. Use Graco replacement parts or accessories that are rated a minimum of 3300 psi.
- Always engage the trigger lock when not spraying. Verify the trigger lock is functioning properly.
- Verify that all connections are secure before operating the unit.
- Know how to stop the unit and bleed pressure quickly. Be thoroughly familiar with the controls.

FIRE AND EXPLOSION HAZARD

Flammable fumes, such as solvent and paint fumes, in **work area** can ignite or explode. Paint or solvent flowing through the equipment can cause static sparking. To help prevent fire and explosion:

- Use equipment only in well ventilated area.
- Do not fill fuel tank while engine is running or hot; shut off engine and let it cool. Fuel is flammable and can ignite or explode if spilled on hot surface.
- Eliminate all ignition sources; such as pilot lights, cigarettes, portable electric lamps, and plastic drop cloths (potential static sparking).
- Ground all equipment in the work area. See **Grounding** instructions.
- Never spray or flush solvent at high pressure.
- Keep work area free of debris, including solvent, rags and gasoline.
- Do not plug or unplug power cords, or turn power or light switches on or off when flammable fumes are present.
- Use only grounded hoses.
- Hold gun firmly to side of grounded pail when triggering into pail. Do not use pail liners unless they are anti-static or conductive.
- **Stop operation immediately** if static sparking occurs or you feel a shock**.** Do not use equipment until you identify and correct the problem.
- Keep a working fire extinguisher in the work area.

WARNING

EQUIPMENT MISUSE HAZARD

Misuse can cause death or serious injury.

- Do not operate the unit when fatigued or under the influence of drugs or alcohol.
- Do not exceed the maximum working pressure or temperature rating of the lowest rated system component. See **Technical Data** in all equipment manuals.
- Use fluids and solvents that are compatible with equipment wetted parts. See **Technical Data** in all equipment manuals. Read fluid and solvent manufacturer's warnings. For complete information about your material, request Safety Data Sheet (SDS) from distributor or retailer.
- Do not leave the work area while equipment is energized or under pressure.
- Turn off all equipment and follow the **Pressure Relief Procedure** when equipment is not in use.
- Check equipment daily. Repair or replace worn or damaged parts immediately with genuine manufacturer's replacement parts only.
- Do not alter or modify equipment. Alterations or modifications may void agency approvals and create safety hazards.
- Make sure all equipment is rated and approved for the environment in which you are using it.
- Use equipment only for its intended purpose. Call your distributor for information.
- Route hoses and cables away from traffic areas, sharp edges, moving parts, and hot surfaces.
- Do not kink or over bend hoses or use hoses to pull equipment.
- Keep children and animals away from work area.
- Comply with all applicable safety regulations.

PRESSURIZED ALUMINUM PARTS HAZARD

Use of fluids that are incompatible with aluminum in pressurized equipment can cause serious chemical reaction and equipment rupture. Failure to follow this warning can result in death, serious injury, or property damage.

- Do not use 1,1,1-trichloroethane, methylene chloride, other halogenated hydrocarbon solvents or fluids containing such solvents.
- Do not use chlorine bleach.
- Many other fluids may contain chemicals that can react with aluminum. Contact your material supplier for compatibility.

MOVING PARTS HAZARD

Moving parts can pinch, cut, or amputate fingers and other body parts.

- Keep clear of moving parts.
- Do not operate equipment with protective guards or covers removed.
- Pressurized equipment can start without warning. Before checking, moving, or servicing equipment, follow the **Pressure Relief Procedure** and disconnect all power sources.

CARBON MONOXIDE HAZARD

Exhaust contains poisonous carbon monoxide, which is colorless and odorless. Breathing carbon monoxide can cause death.

- Do not operate in an enclosed area.

TOXIC FLUID OR FUMES HAZARD

Toxic fluids or fumes can cause serious injury or death if splashed in the eyes or on skin, inhaled, or swallowed.

- Read SDS to know the specific hazards of the fluids you are using.
- Store hazardous fluid in approved containers, and dispose of it according to applicable guidelines.

BURN HAZARD

Equipment surfaces and fluid that's heated can become very hot during operation. To avoid severe burns:

- Do not touch hot fluid or equipment.

⚠WARNING

PERSONAL PROTECTIVE EQUIPMENT

Wear appropriate protective equipment when in the work area to help prevent serious injury, including eye injury, hearing loss, inhalation of toxic fumes, and burns. This protective equipment includes but is not limited to:

- Protective eyewear, and hearing protection.
- Respirators, protective clothing, and gloves as recommended by the fluid and solvent manufacturer.

CALIFORNIA PROPOSITION 65

- The engine exhaust from this product contains a chemical known to the state of California to cause cancer, birth defects or other reproductive harm.
- This product contains a chemical known to the State of California to cause cancer, birth defects or other reproductive harm. Wash hands after handling.

Grounding Procedure
(For Flammable Materials Only)

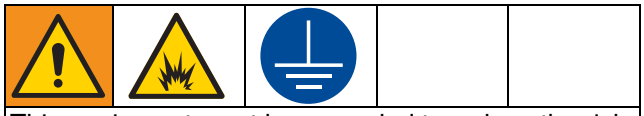

This equipment must be grounded to reduce the risk of static sparking. Static sparking can cause fumes to ignite or explode. Grounding provides an escape wire for the electric current.

1. Position striper so that the tires are not on pavement.
2. Striper is shipped with a grounding clamp. Grounding clap must attach to grounded object. (e.g. metal sign post).

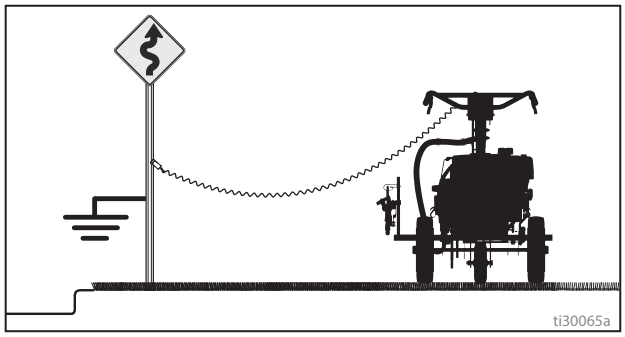

Pressure Relief Procedure

Follow the **Pressure Relief Procedure** whenever you see this symbol.

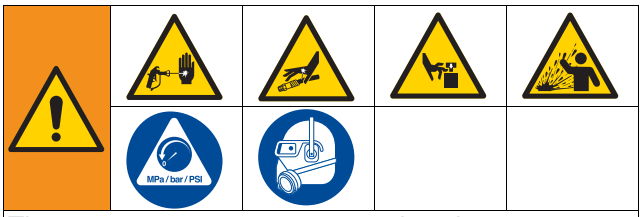

This equipment stays pressurized until pressure is manually relieved. To help prevent serious injury from pressurized fluid, such as skin injection, splashed fluid and moving parts, follow the **Pressure Relief Procedure** whenever sprayer is stopped and before sprayer is cleaned or checked, and before equipment is serviced.

1. Perform **Grounding Procedure** if using flammable materials.
2. Set pump switch **OFF.** Turn engine **OFF**.

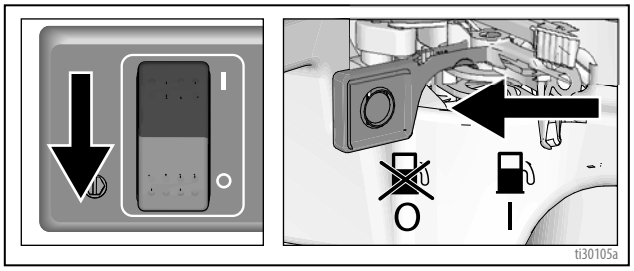

3. Turn pressure to lowest setting. Trigger gun to relieve pressure.

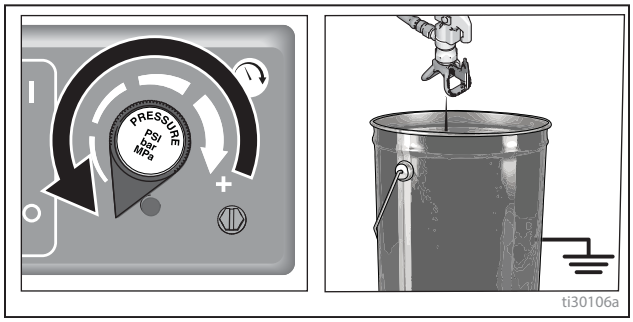

4. Engage the trigger lock. Turn prime valve down.

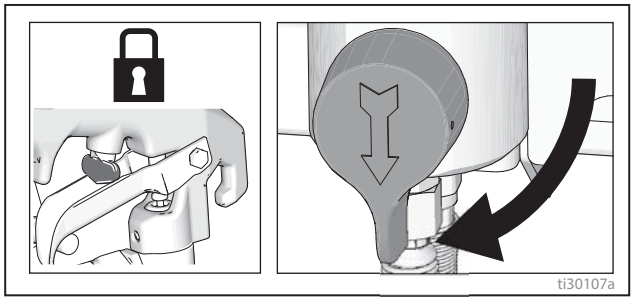

5. If you suspect the spray tip or hose is clogged or that pressure has not been fully relieved:
   a. VERY SLOWLY loosen tip guard retaining nut or hose end coupling to relieve pressure gradually.
   b. Loosen nut or coupling completely.
   c. Clear hose or tip obstruction.

Maintenance

DAILY: Check hose for wear and damage.

DAILY: Check gun safety for proper operation.

DAILY: Check pressure drain valve for proper operation.

DAILY: Check and fill the gas tank.

DAILY: Check level of TSL in displacement pump packing nut. Fill nut, if necessary. Keep TSL in nut to help prevent fluid buildup on piston rod and premature wear of packings and pump corrosion.

Engine Maintenance Schedule

FIRST 5 HOURS: Change oil

EVERY 8 HOURS OR DAILY:

- Check engine oil level.
- Clean area around muffler and controls.
- Clean air intake grille.

EVERY 25 HOURS OR ANNUALLY:

- Clean air filter.
- Clean pre-cleaner.

EVERY 50 HOURS OR ANNUALLY:

- Change engine oil.
- Service exhaust system.

EVERY 100 HOURS: Change gear reduction oil (if equipped)

ANNUALLY:

- Replace spark plug.
- Replace air filter.
- Replace pre-cleaner.
- Service fuel system.
- Service cooling system.
- Check valve clearance.

SPARK PLUG: Use only Briggs & Stratton 491055S or Champion RC12YC spark plug. Gap plug to 0.030 in. (0.762mm). Use spark plug wrench when installing and removing plug.

Front Wheel Alignment:

Align front wheel as follows:

1. Loosen cap screw (90).

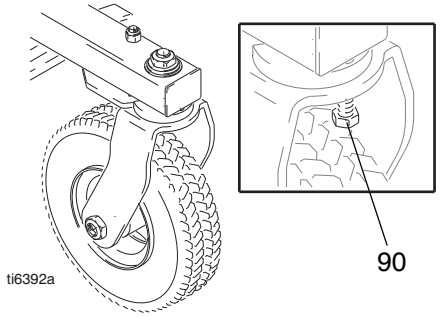

2. Position front wheel left or right, as necessary, to straighten alignment.
3. Tighten cap screw. Push striper and let striper roll with hands off of striper.

NOTE: If striper rolls straight or veers right or left, repeat steps 1 and 2 until striper rolls straight.

Troubleshooting

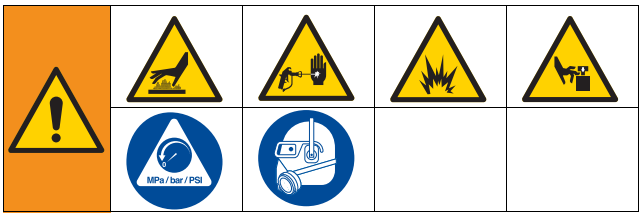

Problem	Cause	Solution
Engine won't start	Engine is out of gas	Refill gas tank. Briggs & Stratton Owner's Manual.
	Engine oil level is low	Check oil level. Replenish oil, if necessary. Briggs & Stratton Owner's Manual.
	Spark plug is disconnected or damaged	Connect spark plug cable or replace spark plug.
	Cold engine	Use choke
	Fuel shutoff / Engine kill switch is OFF	Move lever to ON position.
	Oil is seeping into combustion chamber	Remove spark plug. Pull starter 3 to 4 times. Clean or replace spark plug. Start engine. Keep sprayer upright to avoid oil seepage
Engine operates, but displacement pump does not operate	Pump switch is OFF	Turn pump switch ON
	Pressure setting too low	Turn pressure adjusting knob clockwise to increase pressure
	Fluid filter is dirty	Clean filter
	Tip or tip filter is clogged	Clean tip or tip filter (see gun manual)
	Displacement pump piston rod is stuck due to dried paint	Repair pump (see pump manual)
	Connecting rod is worn or damaged	See parts manual
	Drive housing is worn or damaged	See parts manual
	Electrical power is not energizing clutch field	See parts manual Reference pressure control repair. Page 18. Reference wiring diagram. Page 27. With pump switch ON and pressure turned to MAXIMUM, use a test light to check for power between clutch test points on control board. Remove clutch wires from control board and measure resistance across clutch coil. At 70°F, the resistance must be between 1.2+0.2 ohms; if not, replace pinion housing Have pressure control checked by authorized dealer
	Clutch is worn, damaged, or incorrectly positioned	Adjust or replace clutch. Page 16.
	Pinion assembly is worn or damaged	Repair or replace pinion assembly. Page 16.

Problem	Cause	Solution
Pump output is low	Strainer is clogged	Clean strainer. See pump manual.
	Piston ball is not seating	Service piston ball. See pump manual.
	Piston packings are worn or damaged	Replace packings. See pump manual.
	O-ring in pump is worn or damaged	Replace o-ring. See pump manual.
	Intake valve ball is not seating properly	Clean intake valve. See pump manual. See operations manual.
	Intake valve ball is packed with material	Clean intake valve. See operations manual.
	Engine speed is too low	Increase pressure. See operations manual.
	Clutch is worn or damaged	Adjust or replace clutch. Page 16.
	Pressure setting is too low	Increase pressure. See operations manual.
	Fluid filter, tip filter or tip is clogged or dirty	Clean filter. See operations manual.
	Large pressure drop in hose with heavy materials	Use larger diameter hose and/or reduce overall length of hose. Use of more than 100 ft. of 1/4 in. hose significantly reduces performance of sprayer. Use 3/8 in. hose for optimum performance (50 ft. minimum)
Excessive paint leakage into throat packing nut	Throat packing nut is loose	Remove throat packing nut spacer. Tighten throat packing nut just enough to stop leakage.
	Throat packings are worn or damaged	Replace packings. See pump manual.
	Displacement rod is worn or damaged	Replace rod. See pump manual.
Fluid is spitting from gun	Air in pump or hose	Check and tighten all fluid connections. Reprime pump. See operations manual.
	Tip is partially clogged	Clear tip. See gun manual.
	Fluid supply is low or empty	Refill fluid supply. Prime pump. See operations manual. Check fluid supply often to prevent running pump dry.
Pump is difficult to prime	Air in pump or hose	Check and tighten all fluid connections. Reduce engine speed and cycle pump as slowly as possible during priming.
	Intake valve is leaking	Clean intake valve. Be sure ball seat is not nicked or worn and that ball seats well. Reassemble valve.
	Pump packings are worn	Replace pump packings. See pump manual.
	Paint is too thick	Thin the paint according to the supplier's recommendations.
	Engine speed is too high	Decrease throttle setting before priming pump. See operations manual.
Clutch squeaks each time clutch engages	Clutch surfaces are not matched to each other when new and may cause noise	Clutch surfaces need to wear into each other. Noise will dissipate after a day of run time.
High engine speed at no load	Misadjusted throttle setting	Reset maximum throttle to 3400 engine rpm at no load.
	Worn engine governor	Replace or service engine governor.
Sawtooth edges in line	Vibration being transferred to gun	Adjust throttle control.

Displacement Pump

Removal

1. Stop pump with piston rod (201) in its lowest position.
2. Perform **Pressure Relief Procedure**, page 6.
3. Loosen two screws (32) and remove pump rod cover (107).

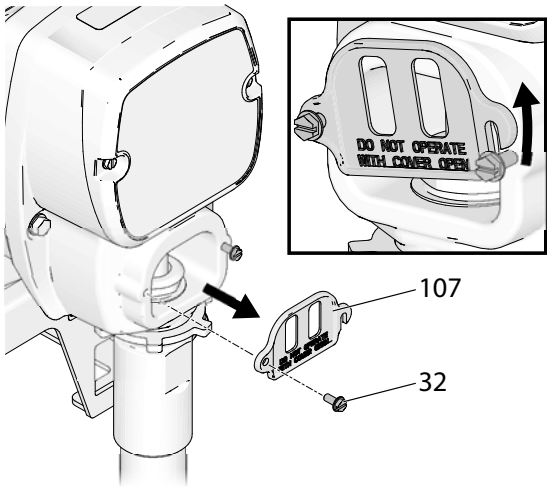

ti30159a

4. Remove hose (118) and suction hose (57). Use screwdriver; push retaining spring up; push out pin (31).

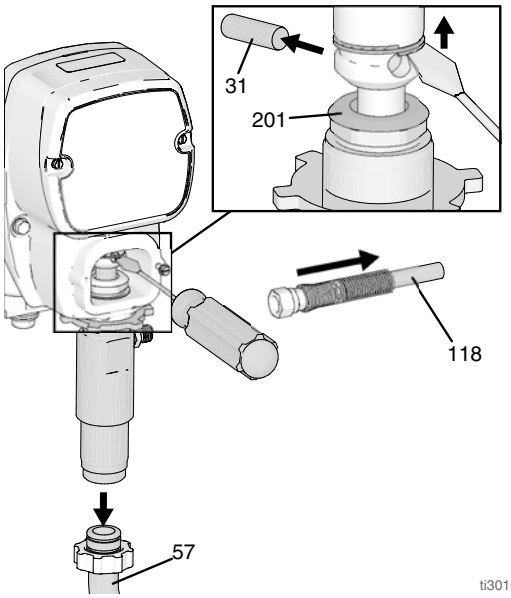

ti30160a

5. Loosen jam nut by hitting firmly with a hammer. Unscrew pump.

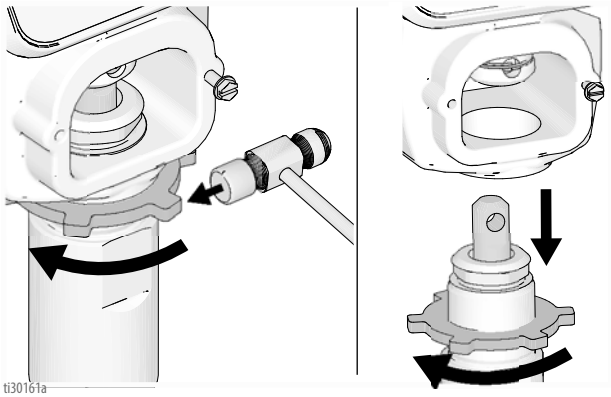

ti30161a

Repair

See manual 3A4347 for pump repair instructions.

Installation

If pin works loose, parts could break off due to force of pumping action. Parts could project through the air and result in serious injury or property damage. Make sure pin and retaining spring are properly installed.

NOTICE

If the pump jam nut loosens during operation, the threads of the bearing housing and drive train will be damaged. Tighten jam nut as specified.

1. Pull piston rod out distance shown. Screw in pump until holes in connecting rod and piston rod align.

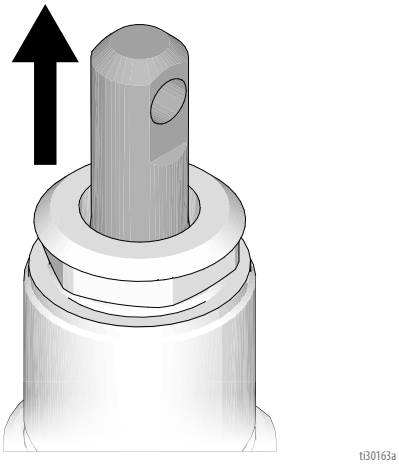

2. Push pin (31) into hole. Push retaining ring spring into groove all the way around connecting rod.

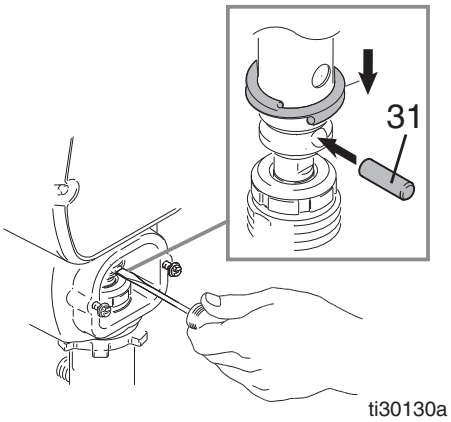

3. Screw jam nut down onto pump until nut stops. Screw pump up into drive housing until top threads of pump are flush with drive housing face. Back off pump and jam nut to align pump outlet to side. Tighten jam nut by hand, then tap 1/8 to 1/4 turn with a 20 oz (maximum) hammer to approximately 75 ±5 ft-lb (102 N·m). Connect hose (118) suction hose (57).

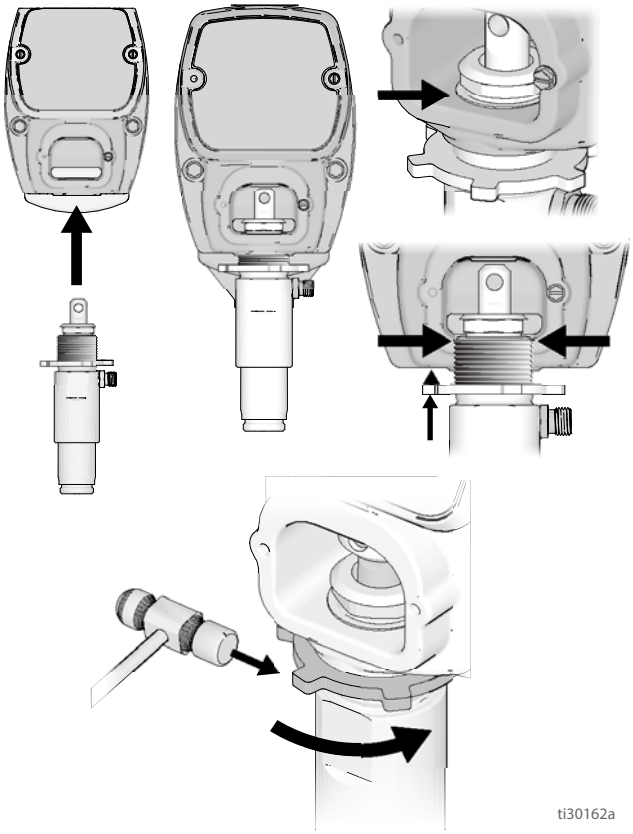

4. Fill packing nut with TSO until fluid flows onto the top of seal. Install pump rod cover (107).

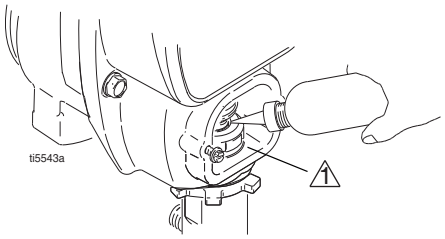

1 Drive housing face

Drive Housing and Connecting Rod

Removal

1. Perform **Pressure Relief Procedure**, page 6.
2. Remove screws (32) and front cover (52).
3. Remove pump. Refer to **Displacement Pump**, page 10.
4. Remove four screws (34) from drive housing (43).

NOTICE

Thrust washers may stick to grease inside of drive housing. Do not lose or misplace.

5. Pull connecting rod (29) and lightly tap lower rear of drive housing (43) with plastic mallet to loosen from pinion housing (44). Pull drive housing and connecting rod assembly off pinion housing.
6. Inspect crank (47) and connecting rod (29) for excessive wear and replace parts as needed.

Installation

1. Evenly lubricate inside of bronze bearing (C) in drive housing (43) with high-quality motor oil. Liberally pack top roller bearing (E), lower bearing (D) inside connecting rod (29) with bearing grease.
2. Assemble connecting rod (29) to drive housing (43). Rotate connecting rod to lowest position.
3. Apply grease to washers 46, 49 and 48. Install in order shown.
4. Lubricate gears with 0.26 pint of 110293 grease (supplied with drive housing). Pack grease evenly around gears.
5. Clean mating surfaces of pinion and drive housings.
6. Align connecting rod with crank (47) and carefully align locating pins in drive housing (43) with holes in pinion housing (44). Push drive housing onto pinion housing or tap into place with plastic mallet.

NOTICE

DO NOT use drive housing screws (34) to align or seat bearing housing with drive housing. Align these parts with locating pins to avoid premature bearing wear.

7. Install screws (34) in drive housing. Torque evenly to note 3 value in Fig. 1.
8. Install pump. Refer to **Displacement Pump**, page 10.
9. Install front cover (52) with two screws (32).

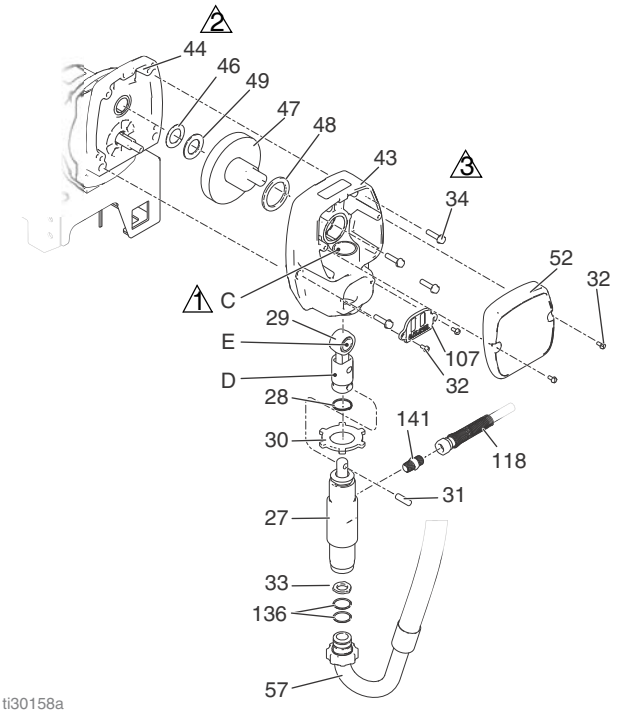

1 Oil
2 Pack with bearing grease 110293
3 Torque to 130-150 in-lb (14-16.9 N•m)

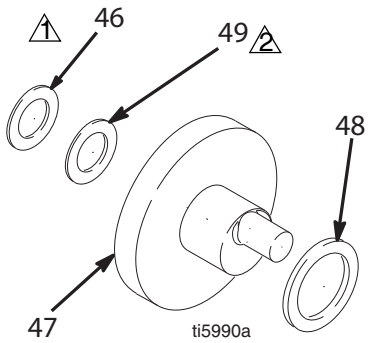

1 Oil
2 Pack with bearing grease 110293

Pinion Assembly/Clutch Armature/Clamp

Pinion Assembly/Clutch Armature Removal

Pinion Assembly

If pinion assembly (44) is not removed from clutch housing (45), do 1. through 3. Otherwise, start at 4.

1. Remove drive housing, page 12.
2. Disconnect clutch (+) and clutch (-) connectors from wire harness located under sprayer cart.
3. Remove four screws (34) and pinion assembly (44).

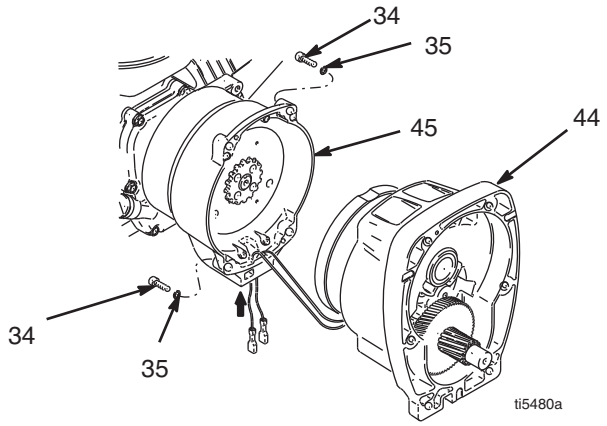

4. Place pinion assembly (44) on bench with rotor side up.
5. Remove four screws (42) and lock washers (35). Install two screws in threaded holes (E) in rotor. Alternately tighten screws until rotor comes off.

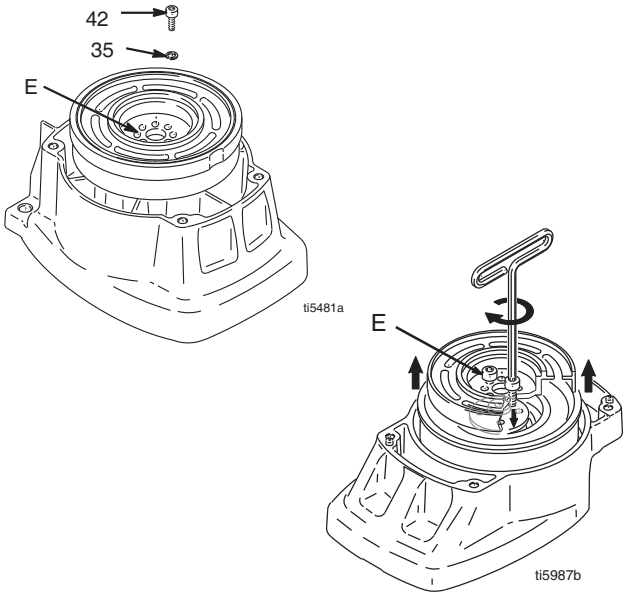

6. Remove retaining ring (44d).
7. Turn pinion assembly over and tap pinion shaft (44c) out with plastic mallet.

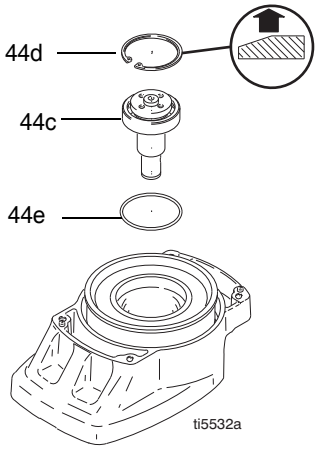

Clutch Armature

8. Use an impact wrench or wedge something between clutch armature (39) and clutch housing to hold engine shaft during removal.
9. Remove four screws (36) and lock washers (35).
10. Remove armature (39).

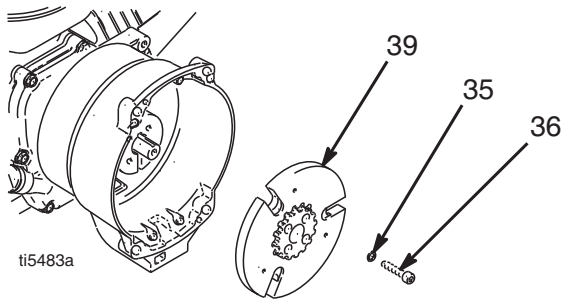

Installation

Clutch Armature

1. Lay two stacks of two dimes on smooth bench surface.
2. Lay armature (39) on two stacks of dimes.
3. Press center of hub (40) down to bench surface.

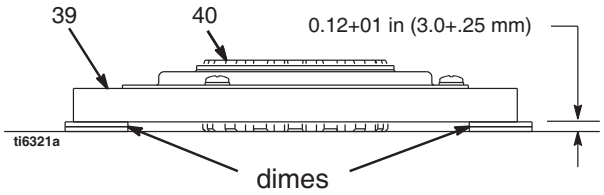

4. Install armature (39) on engine drive shaft.
5. Install four screws (36) and lock washers (35) with torque of 125 in-lb.

Pinion Assembly

1. Check o-ring (44e) and replace if missing or damaged.
2. Tap pinion shaft (44c) in with plastic mallet.
3. Install retaining ring (44d) with beveled side facing up.
4. Place pinion assembly on bench with rotor side up.
5. Apply blue thread locker to screws. Install four screws (42) and lock washers (35). Alternately torque screws to 125 in-lb until rotor is secure. Use threaded holes to hold rotor.
6. Install pinion assembly (44) with four screws (34) and washers (35).
7. Connect clutch cable connectors to inside of pressure control.

Clamp Removal

1. Remove engine. See **Engine Removal**, page 17.
2. Drain gasoline from tank according to Briggs & Stratton manual.
3. Tip engine on side so gas tank is down and air cleaner is up.
4. Loosen two screws (36) on clamp (38).
5. Push screwdriver into slot in clamp (38) and remove clamp.

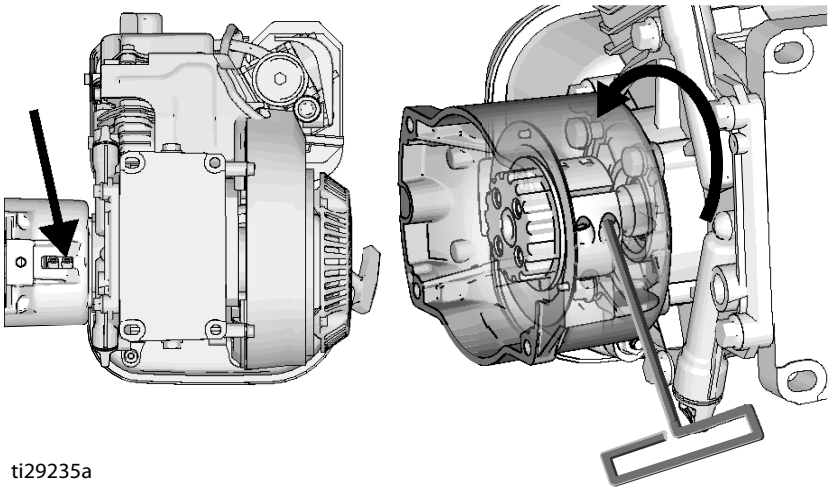

Clamp Installation

1. Install engine shaft key (37).
2. Tap clamp (38) onto engine shaft (A). Maintain dimension shown note 2. Chamfer must face engine.
3. Check dimension: Place rigid, straight steel bar (B) across face of clutch housing (45). Use accurate measuring device to measure distance between bar and face of clamp. Adjust clamp as necessary. Torque two screws (36) to 125 ±10 in-lb (14 ±1.1 N•m).

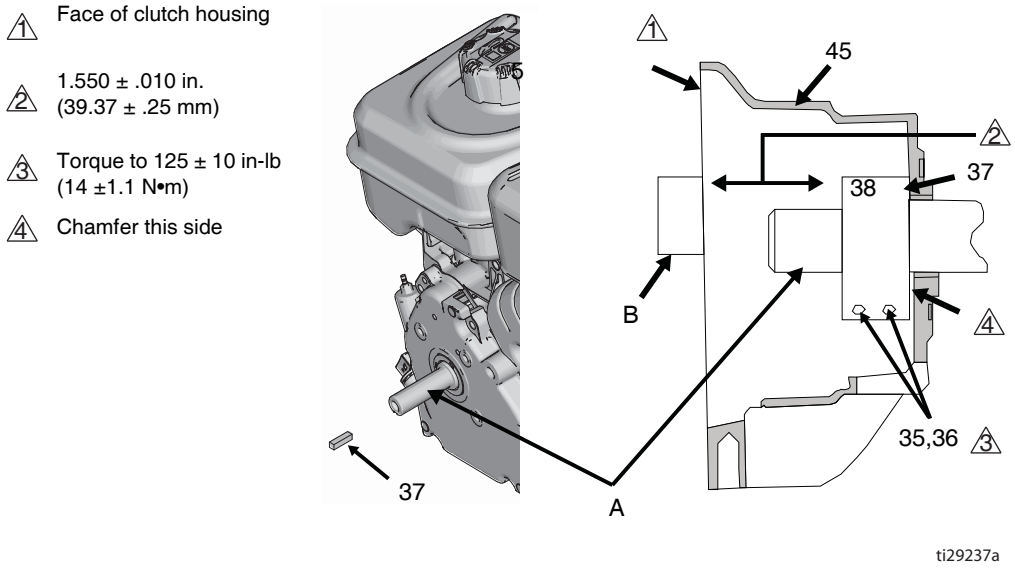

Clutch Housing

Removal

1. Remove clamp. Perform **Clamp Removal**, page 15.
2. Remove four screws (51) and lock washers (50) that hold clutch housing (45) to engine.
3. Remove screw (145) from under mounting plate.
4. Pull off clutch housing (45).

Installation

1. Push on clutch housing (45).
2. Install four cap screws (51) and lock washers (50) and secure clutch housing (45) to engine. Torque to 200 in-lb (22.6 N•m).
3. Install screw (145) from beneath mounting plate. Torque to 26 ft-lb (35.2 N•m).

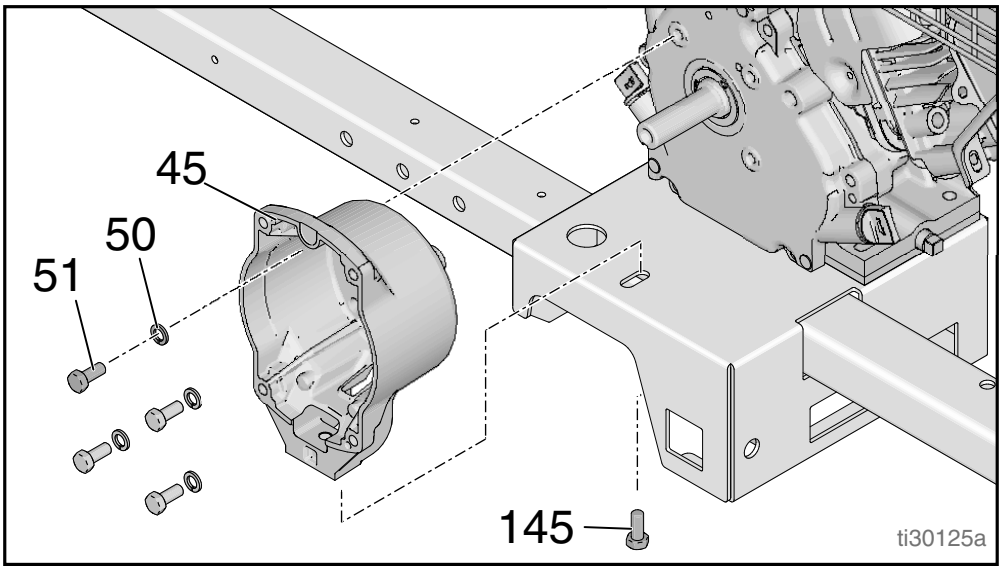

Engine

Removal

NOTE: All service to the engine must be performed by a Briggs & Stratton authorized service dealer.

1. Disconnect all necessary wiring.
2. Remove two lock nuts (111) and screws (110) from base engine, and screw (145) from clutch housing (45)
3. Lift engine carefully and place on work bench.
4. Perform **Clamp Removal**, page 15, and **Clutch Housing Removal**, page 16.

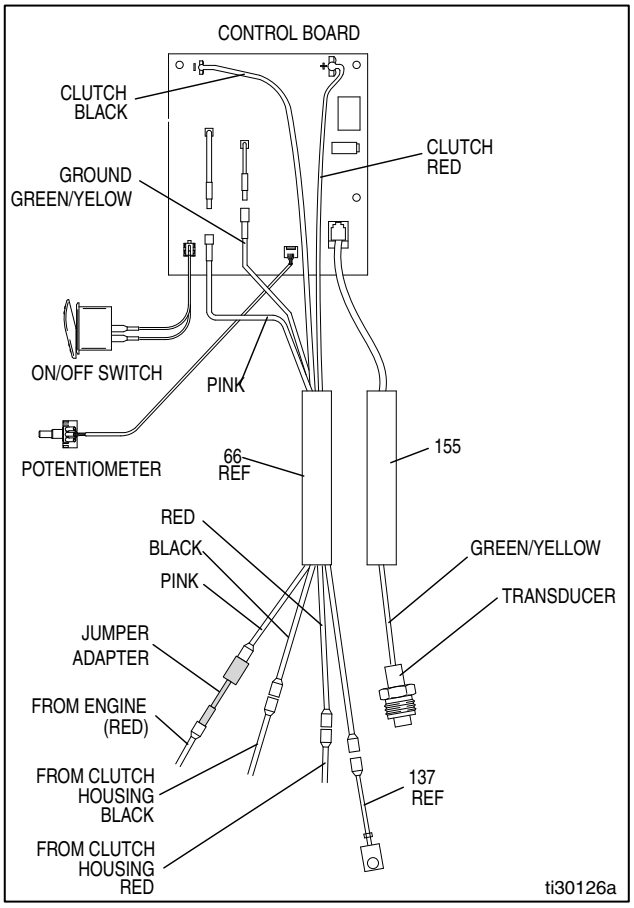

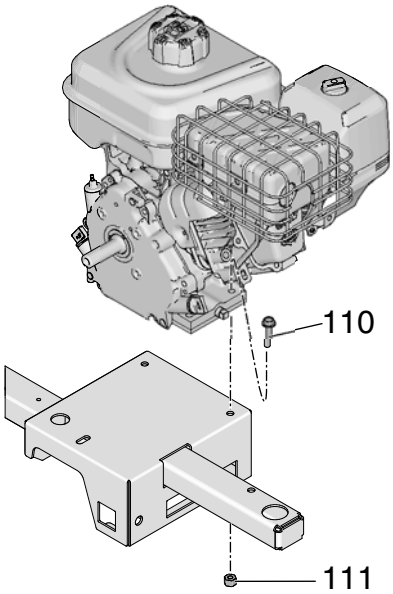

Installation

1. Lift engine carefully and place on cart.
2. Install two screws (110) in base of engine and secure with lock nuts (111). Torque to 20 ft-lb (27.12 N•m),
3. Connect all necessary wiring.
4. Install **Clutch Housing**, page 16, and **Pinion Assembly/Clutch Armature/Clamp**, page 13.

Pressure Control Transducer

Removal

1. Remove two screws (108) and open cover (62a).
2. Disconnect transducer (155) cable from control board (62e).
3. Pull transducer connector through strain relief bushing (151).
4. Remove transducer and o-ring (99) from filter housing (67).

Installation

1. Install o-ring (99) and transducer (155) in filter housing (67). Torque to 35 - 45 ft-lb.
2. Install transducer connector and strain relief bushing in control housing.
3. Connect cable (155) to control board (62e).
4. Close cover (62a) and secure with two screws (108).

Pressure Control (On/Off Switch)

Removal

1. Remove two screws (108) and open cover (62a).
2. Disconnect ON/OFF switch connector from pressure control board.
3. Press in on two retaining tabs on each side of ON/OFF switch (62d) and remove switch from cover.

Installation

1. Install new ON/OFF switch (62d) so tabs of switch snap into place on inside of cover.
2. Connect ON/OFF switch connector (B) to pressure control board.
3. Close cover (62a) and secure with two screws (108).

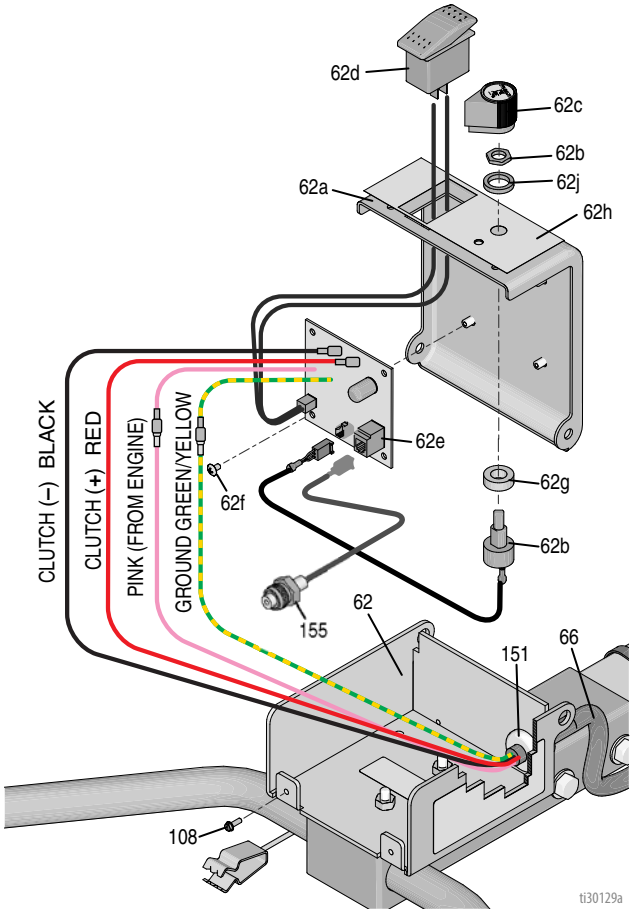

Pressure Adjust Potentiometer

Removal

1. Remove two screws (108) and open cover (62a).
2. Disconnect potentiometer (62b) cable from control board (62e).
3. Loosen set screws on potentiometer knob (62c) and remove knob, shaft nut, lock washer and potentiometer (62b).
4. Remove spacer (62g) from potentiometer.

Installation

1. Install spacer (62g) on potentiometer (62b).
2. Install potentiometer, shaft nut, lock washer and potentiometer knob (62c).
   a. Turn potentiometer shaft clockwise to internal stop. Assemble potentiometer knob (62c) to touch pin on cover (62a).
   b. After adjustment of step a., tighten both set screws in knob 1/4 to 3/8 turn after contact with shaft.
3. Connect potentiometer (62b) cable to control board (62e).
4. Close cover (62a) and secure with two screws (108).

Control Board

Removal

1. Remove two screws (108) and open cover (62a).
2. Disconnect engine and ground wires from wire harness (66).
3. Disconnect at control board (62e):
   - Cable from potentiometer (62b)
   - Cable from transducer (155)
   - Cable from ON/OFF switch (62d)
   - Clutch wires
4. Remove four screws (62f) and control board (62e).

Installation

1. Install control board (62e) with four screws (62f).
2. Connect at control board (62e):
   - Clutch wires
   - Cable from ON/OFF switch (62d)
   - Cable from transducer (155)
   - Cable from potentiometer (62b)
3. Connect engine and ground wires.
4. Close cover (62a) and secure with two screws (108).

Parts Drawing

25M229

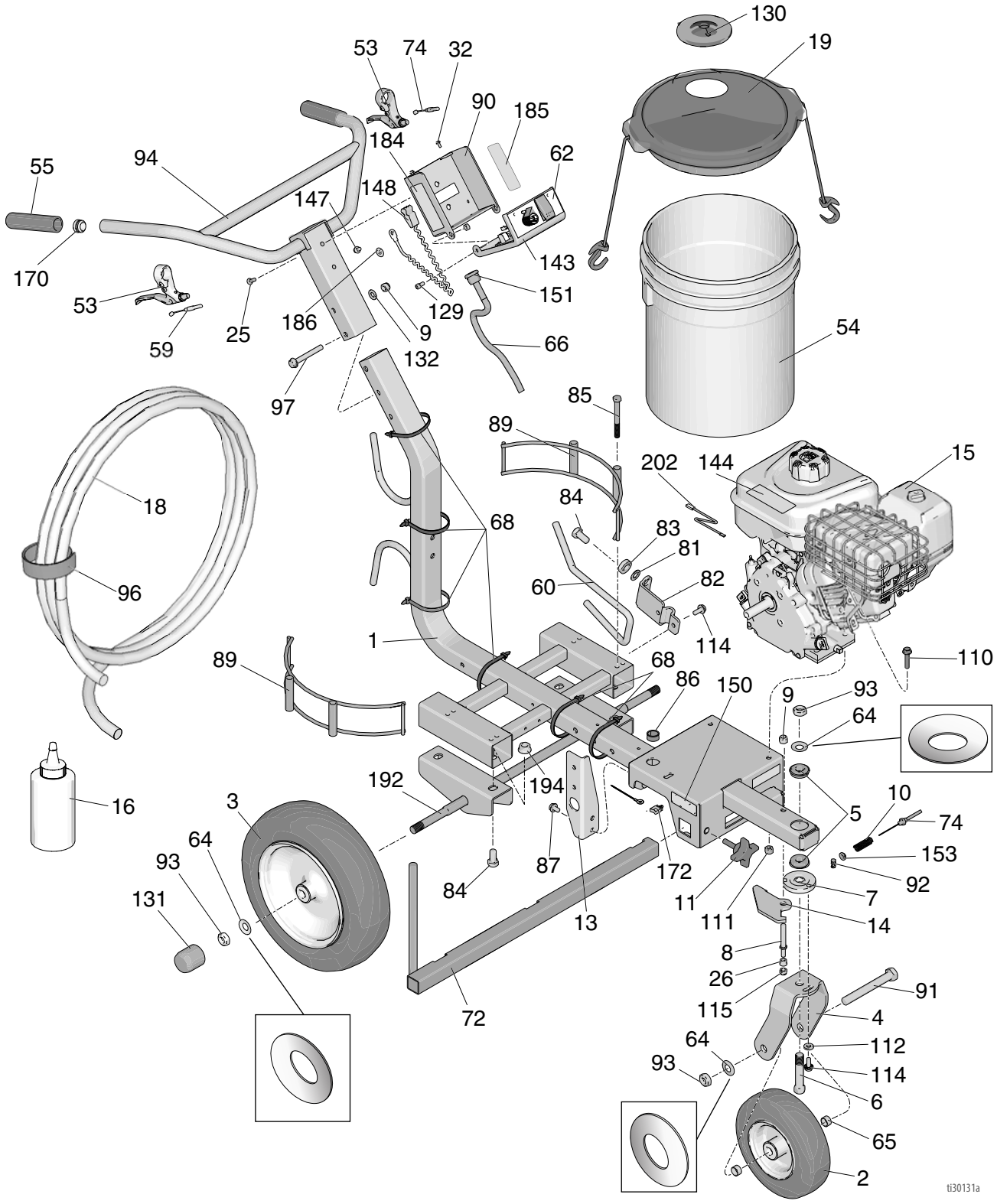

Parts List - 25M229

Ref.	Part	Description	Qty
1	17N512	FRAME	1
2	119542	WHEEL, small	1
3	119543	WHEEL, large	2
4	17N149	FORK, painted	1
5	119532	BEARING, flanged	2
6	15E780	PIN, fork	1
7	15E773	DISK, adjuster	1
8	15E792	PIN, lever	1
9	101566	NUT, lock	3
10	114682	SPRING, compression	1
11	108471	KNOB, pronged	1
13	15E748	BRACKET, manifold	1
14	287682	LEVER, caster, includes 26	1
15	17M303	ENGINE, gasoline, 5.5 hp	1
16	867670	FLUID, TSO, 6 oz.	
18	17M383	HOSE, coupled, 1/4 in. x 50 ft, nickel	1
19	24U241	KIT, pail cover	
25	108538	SCREW, cap, flathead	2
26	111016	BEARING, flange	1
32	128978	SCREW, 8-32 hex washer head	8
53	194310	LEVER, actuator	2
54	115077	PAIL, plastic	1
55	129378	GRIP, handle	2
59	15E992	CABLE, gun	1
60	15E993	ROD, brake	1
62	287565	COVER, control box, assy	1
64	119563	WASHER, belleville	4
65	15E996	SPACER, wheel	2
66	15E995	HARNESS, wiring, control	1
72	224052	BRACKET, support, gun	1
74	241445	CABLE, caster	1
81	195134	SPACER, ball, guide	1
82	198891	BRACKET, mounting	1
83	198931	BEARING	1
84	113961	SCREW, cap, hex hd	1
85	867517	SCREW, hex head, 3/8-16 x 3.5”	4
86	129528	GROMMET, split, 1” hole	1
87	111801	SCREW, cap, hex, hd	4
89	17N536	HOLDER, bucket	2
90	15F047	CONTROL, box	1
91	113665	SCREW, cap, hex hd	1
92	114802	WIRE, stop	1
93	119554	NUT, lock, nylon, thin pattern	4
94	24Z284	BAR, handle	1
96	129382	STRAP, hose wrap	1
97	116935	SCREW, cap, flng hd	2
110	112960	SCREW, flange, hex	2
111	110838	NUT, lock	2
112	122669	WASHER, flat, extra thick	1
114	110963	SCREW, cap, flng hd	1
115	111040	NUT, lock, insert, nylock, 5/16 in.	1
129	101550	SCREW, cap, sch	2
130	278723	GASKET, pail	1
131	15C871	CAP, leg	2
132	100731	WASHER	2
143	17N735	LABEL, BS3500	1
144▲	194126	LABEL, warning	1
147	107257	SCREW, thread forming, hex hd	1
148	237686	WIRE, ground assembly w/ clamp	1
150▲	16P136	LABEL, safety, warning	1
151	15F928	BUSHING, strain relief	1
153	111025	GASKET, polypropylene	1
170	120151	PLUG, tube	2
172	117727	CLIP, wire	1
184▲	17K392	LABEL, safety, warning, injection	1
185▲	17K394	LABEL, safety, warning, fire & explosion	1
186▲	16W503	LABEL, safety, ground symbol	1
▲	222385	LABEL, warning, medical alert (not shown)	1
192	24Z605	AXLE, weldment	1
194	112731	NUT, hex, flanged	4
202	129530	ADAPTER, jumper	1

▲ *Replacement Danger and Warning labels, tags, and cards are available at no cost.*

Parts Drawing

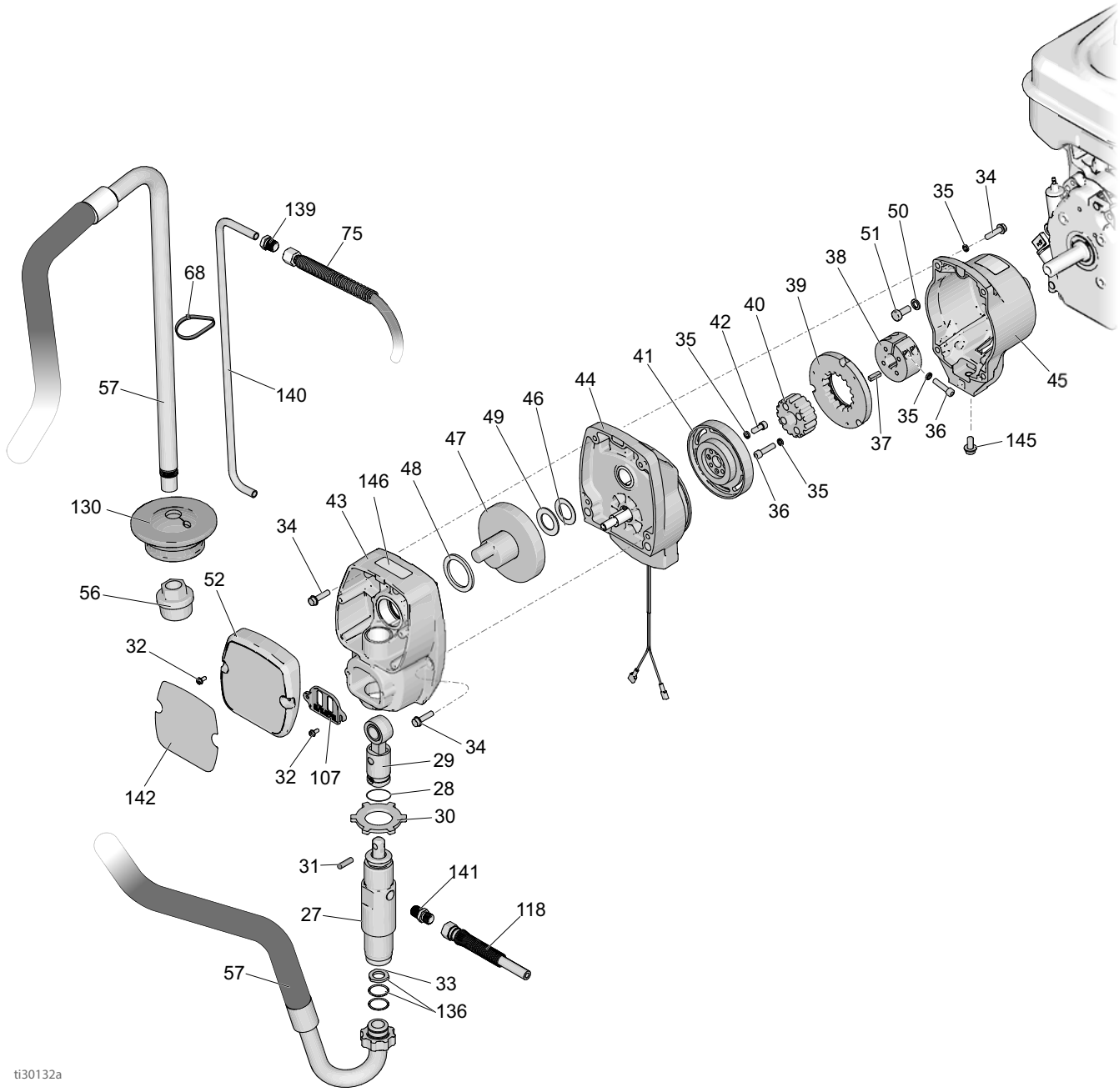

Parts List - 25M229

Ref.	Part	Description	Qty
27	17M989	PUMP, displacement	1
28	196750	SPRING, retaining	1
29	287053	ROD, connecting	1
30	195150	NUT, jam, pump	1
31	196762	PIN, straight	1
32	128978	SCREW, mach, hex washer head	6
33†	115099	WASHER	1
34	119426	SCREW, mach, hex washer hd	8
35*	105510	WASHER, lock, spring (hi-collar)	10
36*	108803	SCREW, hex, socket head	6
37	183401	KEY, parallel	1
38	193680	COLLAR, shaft	1
39*	193673	ARMATURE, clutch, 4 in.	1
40*	193510	HUB, armature	1
41*	193671	ROTOR, clutch, 4 in.	1
42*	101682	SCREW, cap, sch	4
43	17M310	HOUSING, drive, includes 32, 34	1
44	17M313	HOUSING, pinion	1
45	17M314	HOUSING, clutch, machine	1
46	116074	WASHER, thrust	1
47	287484	CRANK, includes 46, 48, 49	1
48	180131	BEARING, thrust	1
49	107434	BEARING, thrust	1
50	100214	WASHER, lock	4
51	108842	SCREW, cap, hex hd	4
52	277019	COVER, front, includes 32	1
56	246385	STRAINER, 7/8-14 unf	1
57	17M772	HOSE, suction, includes 33, 56, 130, 136	1
68	404989	STRAP, tie	7
75	17M382	HOSE, cpld, 1/4 in. X 3.0 ft	1
107	15B589	COVER, pump rod	1
118	17M384	HOSE, coupled, 1/4 in. X 22.25 in.	1
136†	117559	O-RING	2
139	196180	BUSHING	1
140	16X071	TUBE, drain	1
141	196181	FITTING, nipple	2
142	17N734	LABEL, pump, BS3500	1
145	112395	SCREW, cap, flng hd	1
146▲	290228	LABEL, warning	1

▲ *Replacement Danger and Warning labels, tags, and cards are available at no cost.*
* *Included in Clutch Replacement Kit 241109*
† *Included in Suction Hose Kit 17P807*

Parts Drawing and List - Pinion Housing

Ref No. 44: Pinion Housing

Ref.	Part	Description	Qty
44	17M313	PINION HOUSING	1
44a	287482	KIT, repair, coil	1
44b	105489	PIN	2
44c*	287485	PINION SHAFT	1
44d*	113094	RETAINING RING, large	1
44e*	165295	O-RING, packing	1

* May be ordered separately

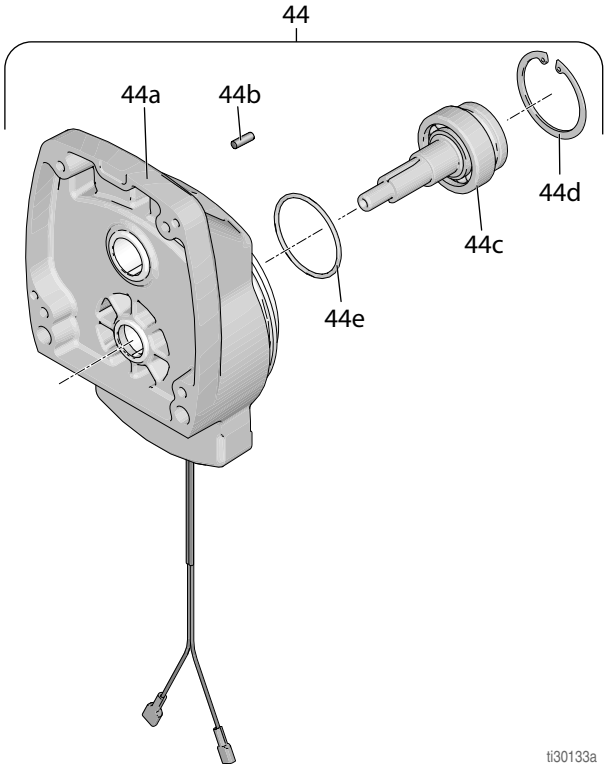

Gun Arm Parts

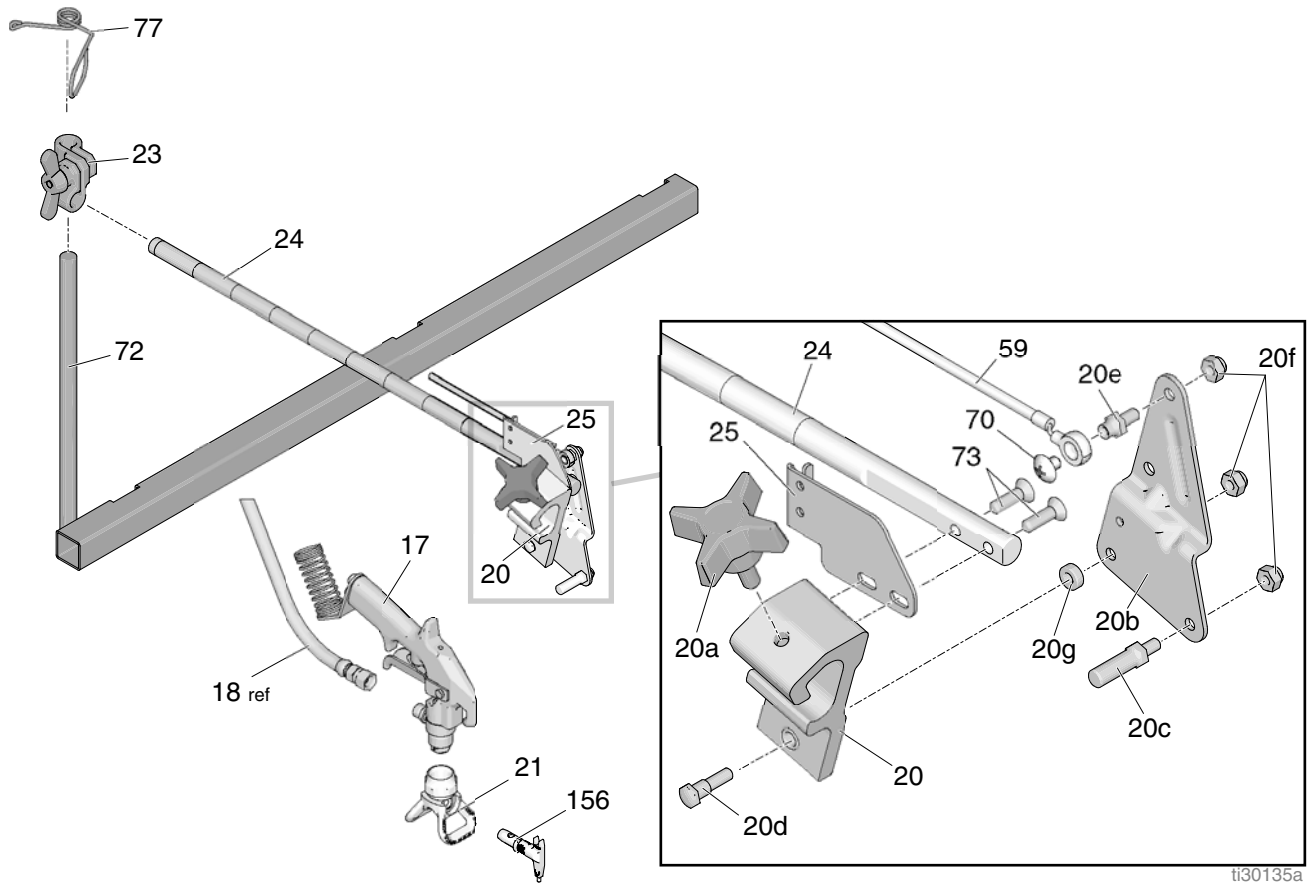

Ref	Part	Description	Qty
17	25M223	GUN, SureStripe	1
20*	287570	HOLDER, gun	1
20a*	15F750	HOLDER, gun, knob	1
20b*	15F214	LEVER, actuator	1
20c*	15F209	STUD, pull trigger	1
20d*	24Y991	KIT, pivot	1
20e*	15F211	STUD, cable	1
20f*	102040	NUT, lock	3
20g*	24Y991	KIT, pivot	1
21	248200	GUARD, Uni-Tip	1
23	287566	KIT, clamp	1
24*	17J145	ARM, holder, gun	1

Ref	Part	Description	Qty
25*	15F213	BRACKET, cable	1
59	15E992	CABLE, gun	1
70*	119648	SCREW, mach, trusshd, cross recess	1
72	224052	BRACKET, support gun	1
73*	113428	SCREW, cap, socket, flthd	2
77	188135	GUIDE, cable	1
156	69319ST	TIP, spray, striping	1
	69317ST	TIP, spray, striping	1
	*17H720	STRAP, tie	3

* *Included in Gun Holder Repair Kit 25A528*

Pressure Control/Filter Assembly

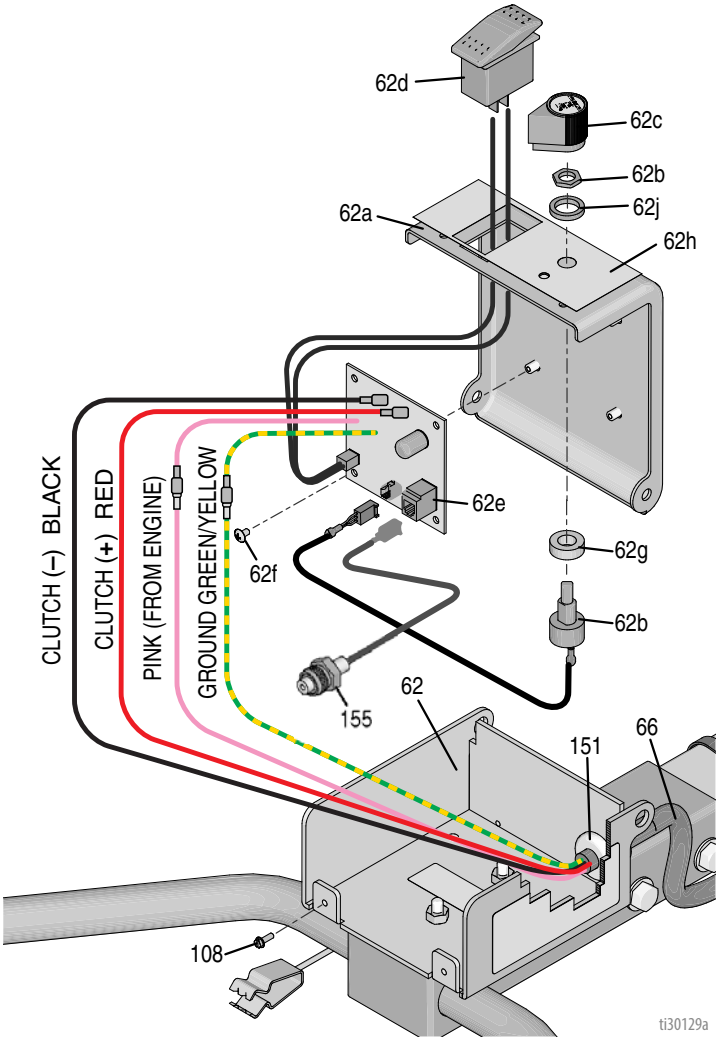

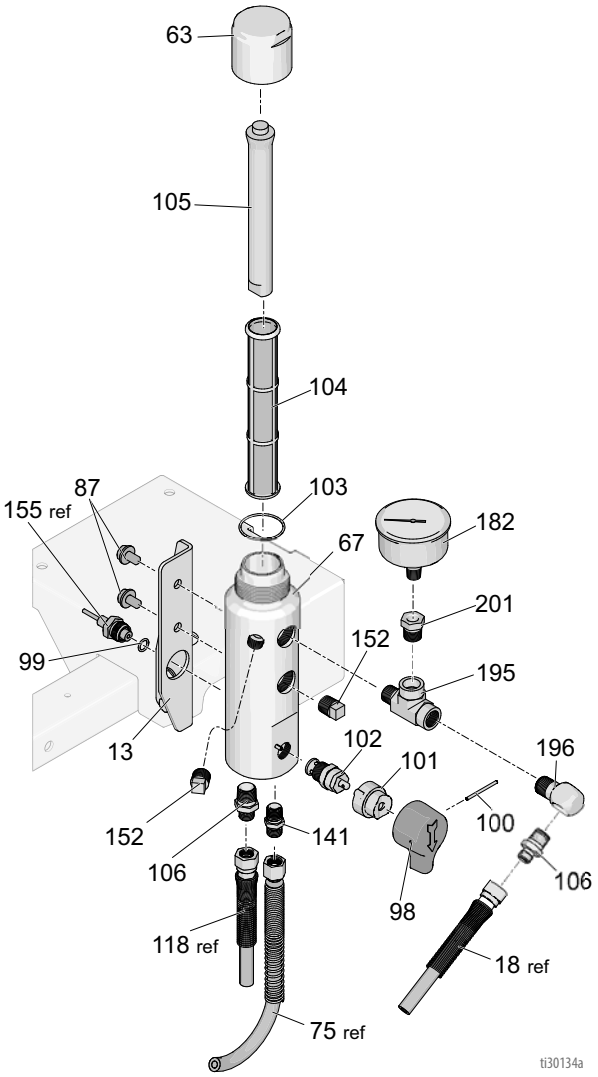

Parts List - Pressure Control/Filter Assembly

Ref	Part	Description	Qty
13	15E748	BRACKET, manifold	1
62	15F047	BOX, control	1
62a	15E991	COVER, control box	1
62b	256219	POTENTIOMETER	1
62c	116167	KNOB, potentiometer	1
62d	116752	SWITCH, rocker	1
62e	287486	BOARD, control,	1
62f	113045	SCREW, sems, mach, phillips, truss	4
62g	198650	SPACER, shaft	1
62h	15F540	LABEL, controls	1
62j	15C973	GASKET	1
63*	287285	CAP, manifold, includes 103, 105	1
67*	17K166	MANIFOLD, filter	1
87	111801	SCREW, cap, hex hd	4
98*	15C780	HANDLE	1
99*	111457	O-RING	1
100*	15C972	PIN, grooved	1
101*	224807	BASE, valve	1
102*	239914	VALVE, drain	1
103*	117285	O-RING	1
104*	243984	FILTER, fluid	1
105*	15C766	TUBE, diffusion	1
106	196177	ADAPTER, nipple	2
141	196181	FITTING, nipple	2
152*	101748	PIPE, plug, sst	2
155*	15F782	HARNESS, transducer, line striper	1
182	804582	GAUGE, pressure fluid	1
195	124490	FITTING, tee	1
196	196179	FITTING, elbow	1
201	129535	BUSHING, pipe	1

* *Included in Filter Repair Kit 17P809*

Pressure Control Wiring Diagram

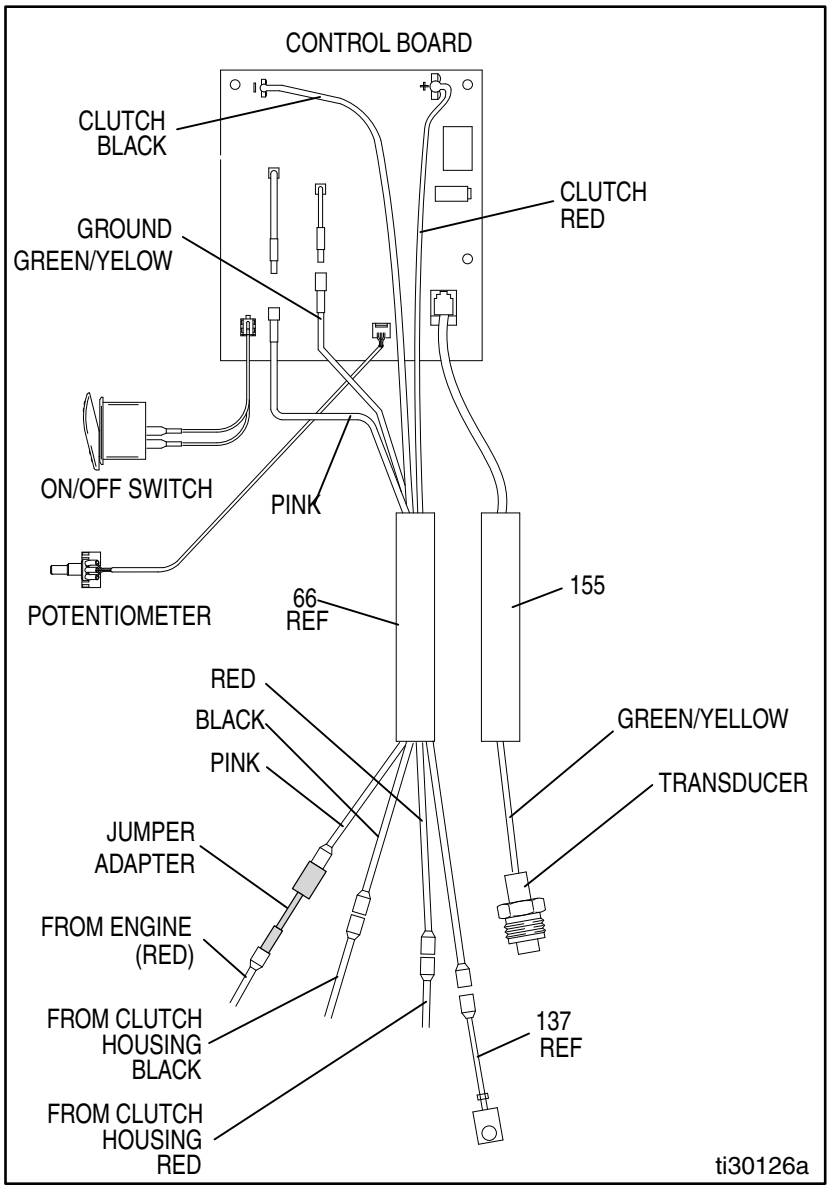

PIONEER LIMITED WARRANTY

PIONEER warrants the Brite Striper 3500 manufactured by it to be free from defects in material and workmanship on the date of sale by an authorized PIONEER Distributor to the original purchaser. Pioneer will, for the period of two (2) years from the date of sale, repair or replace any part of the equipment proven defective. This warranty applies only when the equipment is installed, operated and maintained in accordance with Pioneer's written recommendations.

This Warranty does not apply to equipment which has been resold or rented, or has damage from wear caused by abrasion, corrosion or misuse, negligence, accident, faulty installation or tempering in a manner to impair normal operation, inadequate or improper maintenance or substitution of non-Pioneer component parts.

This warranty is conditioned upon the prepaid return of the equipment claimed to be defective to a Pioneer authorized service center for verification of the claim. If the claim is verified, Pioneer will repair or replace free of charge any defective parts. The equipment will be returned to the original purchaser transportation prepaid. If inspection of the equipment does not disclose any defect in material or workmanship, repairs will be made at a reasonable charge, which charges may include the costs of parts, labor, and transportation.

Pioneer makes no warranty, and disclaims all implied warranties of merchantability and fitness for a particular purpose, with respect to accessories, equipment, materials or components sold but not manufactured by Pioneer. These items sold, but not manufactured by Pioneer, such as engines, hoses, etc, are subject to warranty, if any, of their manufacturer. Pioneer will provide purchaser with reasonable assistance in making any claim for these warranties.

TO PLACE AN ORDER OR FOR SERVICE, contact Pioneer at
1–800–877-1500 (fax 1-800-877-1511) to identify the nearest service center.

All written and visual data contained in this document reflects the latest product information available at the time of publication. Pioneer reserves the right to make changes at any time without notice.

For patent information, see www.graco.com/patents.

Original instructions. This manual contains English. MM 3A4556

Pioneer Athletics
4529 Industrial Parkway
Cleveland, OH 44135
www.pioneerathletics.com
Revised B, January 2017